G47-1500/1650/1850

www.turbosbytm.com

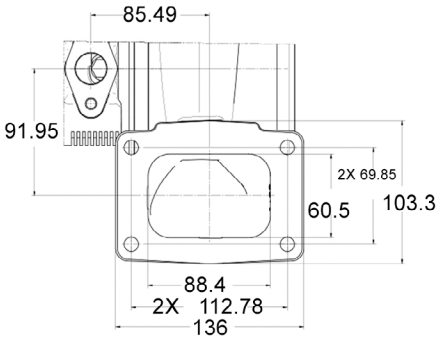

TURBINE INLET T6

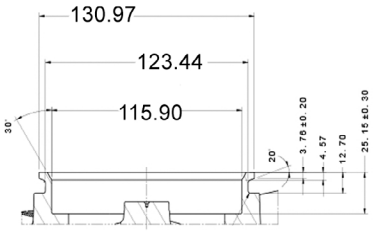

TURBINE OUTLET V-BAND

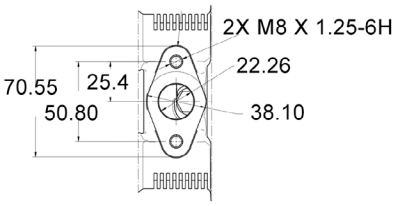

OIL OUTLET

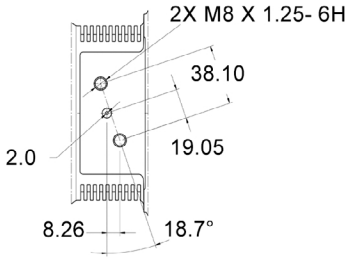

OIL INLET

turbosbytm.com

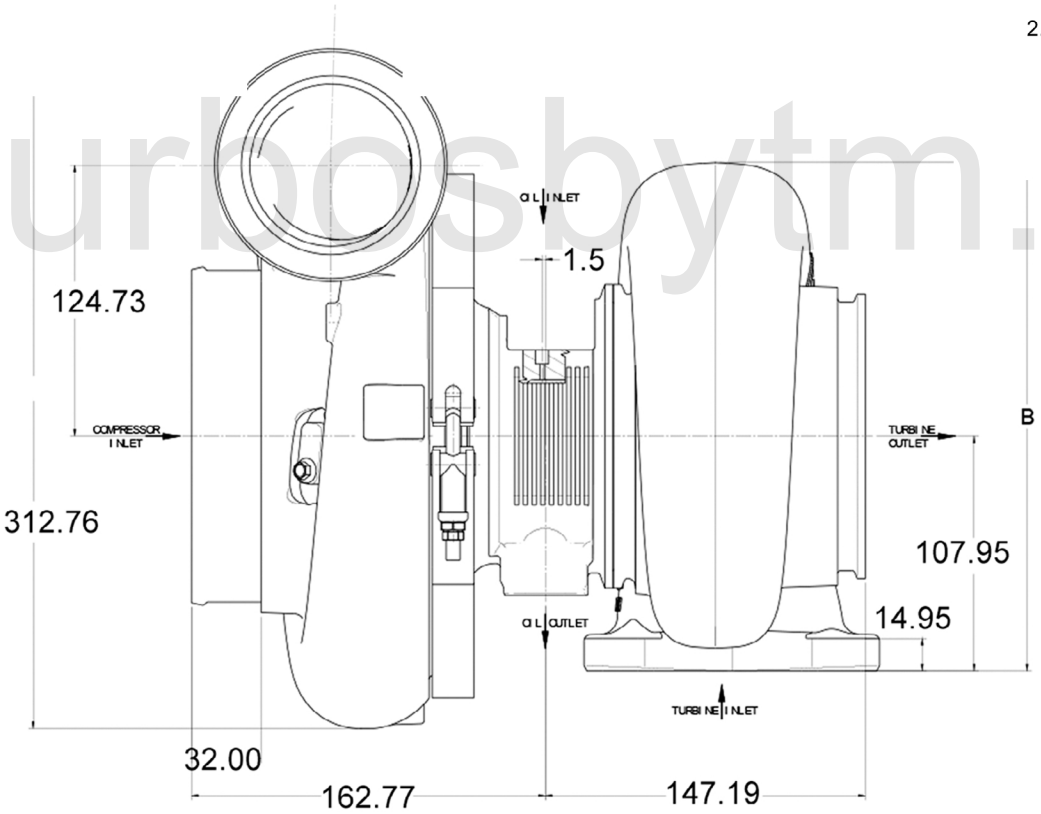

SIZE	TURBINE				
G-47	A/R	0.96	1.08	1.23	1.39
	B	221.36	225.21	229.54	233.84

All Measurements in MM