www.turbosbytm.com

RELEASED			
REV	DATE	REVISION	DWN
A	-	RELEASED	-
-	-	-	-
-	-	-	-

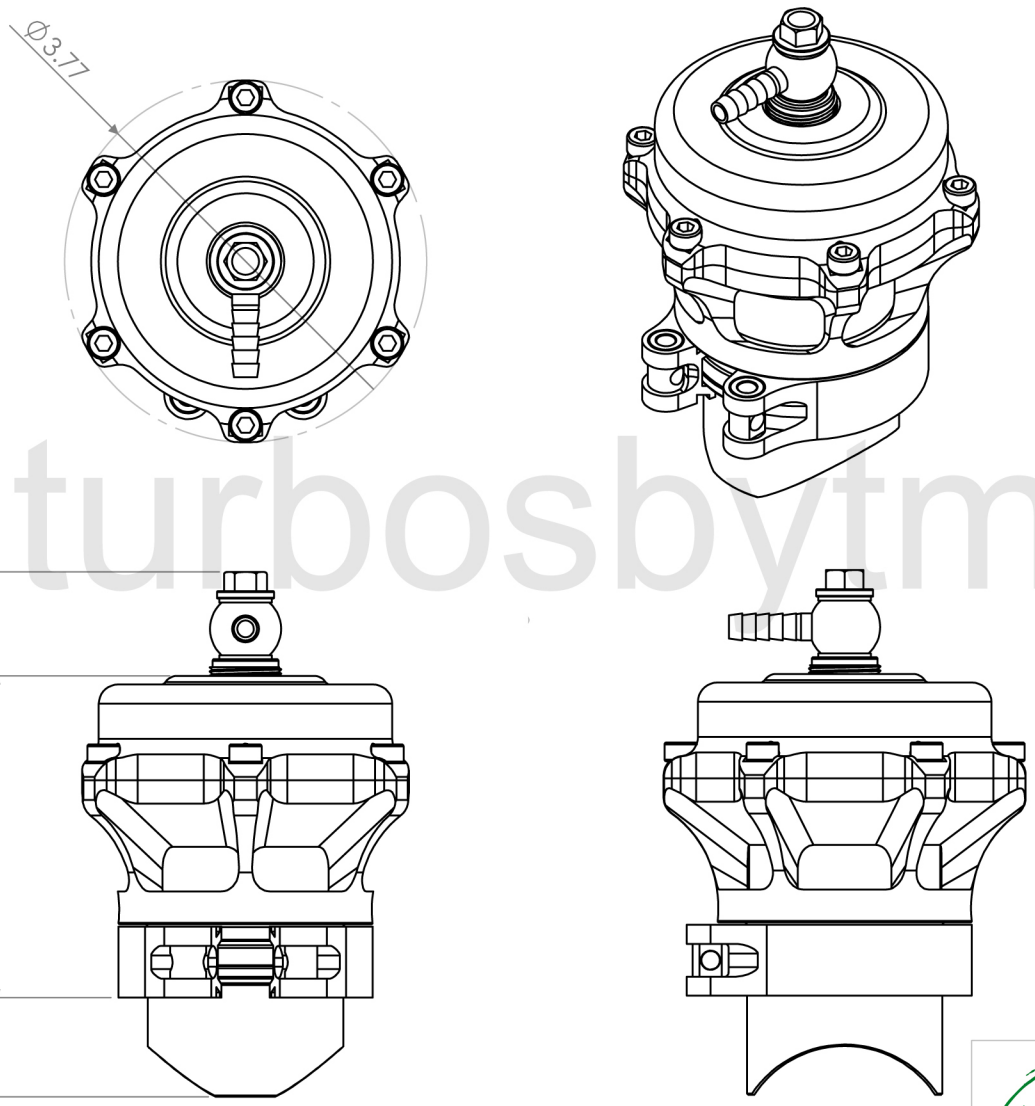

turbosbytm.com

QUALITY CONTROL APPROVED

TM Sport & Racing

TiAL SPORT

TITLE

TiAL Q Blow-Off

Body with flange

SIZE	PART NO.	REV
A	714342-ALL	A

MATERIAL	DRAWN:	DATE:	CHECKED:	SHEET: 1 OF 1
	ACS	09/08/2014		

PROPRIETARY AND CONFIDENTIAL

Dimension in inches

© TurboMaster s.l.

5 4 3 2 1